RHEINMETALL GROUP

gmv

TNO innovation for life

LARIMART a LEONARDO company

EUROPEAN DEFENCE AGENCY

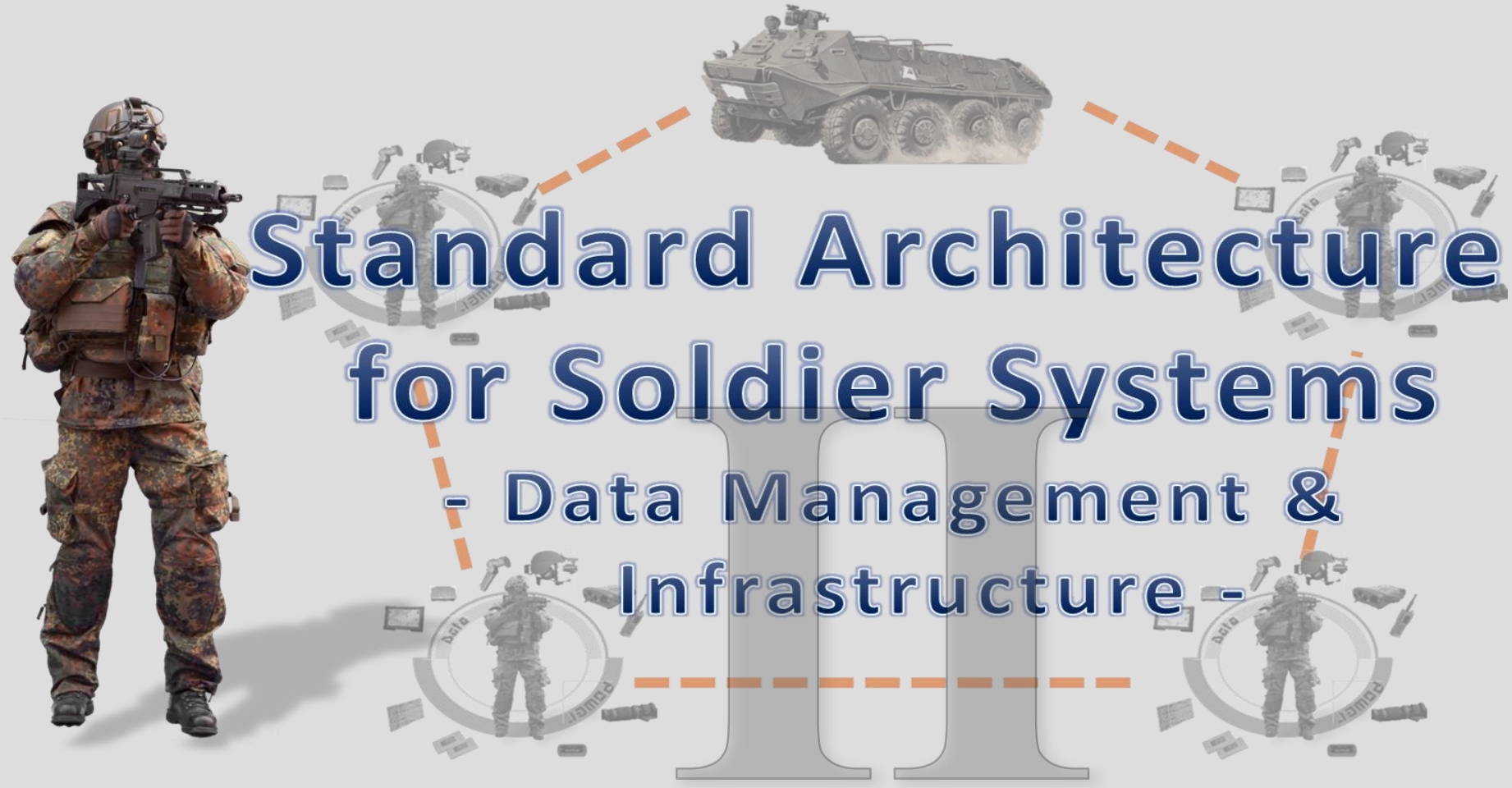

Standard Architecture for Soldier Systems - Data Management & Infrastructure -

STASS II Industrial Workshop
16.CAT.OP.131
Brussels, 6th September 2017

WP 4 – System View

Jose Luis Delgado Gamella, Vicente Javier de Ayala – GMV

© STASS II Project 2017

STASS II Industrial Workshop – WP4 System View

- **Development Process**
- Soldier Configurations
- NSV-1 System Interface Description
- NSV-2 Systems Communication Description
- NSV-3 Systems to Systems Matrix
- NSV-4 Systems Functionality Description
- NSV-12 Service Provision

© STASS II Project 2017

Development Process

- **All views are involved in the architecture development**
  - **Background View** – the analysis of 19 Soldier Systems from different nations
  - **Capability View** – strategic context for the soldier capabilities
  - **Operational View** – operational context for high level architecture description
  - **Service Oriented View** – the defined services allow the DSS to accomplish the functional needs
  - **Technical View** – analysis of standards and protocols used by the selected systems and support the architecture needs

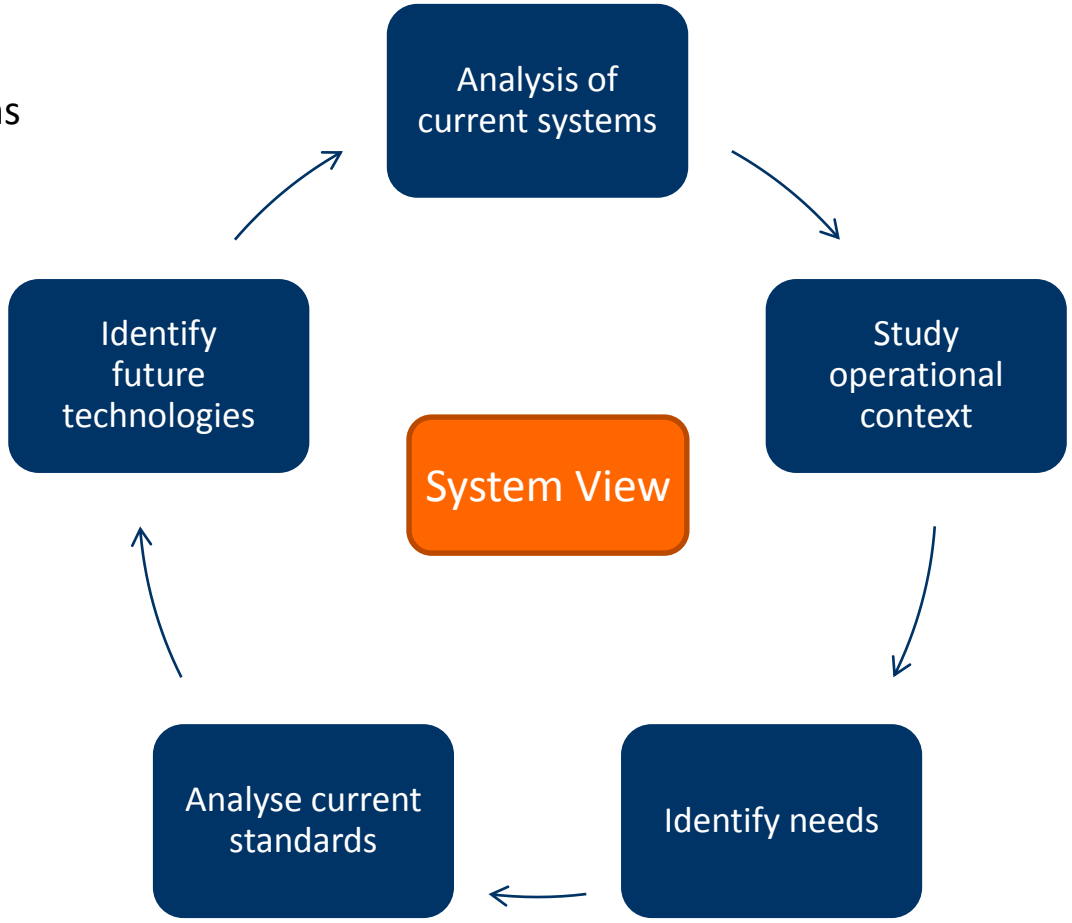

Architecture Development Process

© STASS II Project 2017

Development Process – Definitions

- **Analysis of a DSS components considering the following categorizations:**
  - DSS Configuration
    - Basic
    - Extended (bundle of configurations): composition of Basic Conf. + Additional Devices
  - On/Off Board Systems
    - "on-board" internal devices, all devices carried by the soldier – categories: Head, Torso, Weapon and Supporting devices (*).
      - Radio, GNSS Receiver, headset, etc.
    - "off-board" external and shared devices
      - UAV, Platforms (air, marine and ground vehicles), range-finder etc.

(*) Same categories as in Def-Stan 23-12 "Generic Soldier Architecture" (GSA) for the data and power infrastructure definition.

© STASS II Project 2017

STASS II Industrial Workshop – WP4 System View

- Development Process
- **Soldier Configurations**
- NSV-1 System Interface Description
- NSV-2 Systems Communication Description
- NSV-3 Systems to Systems Matrix
- NSV-4 Systems Functionality Description
- NSV-12 Service Provision

© STASS II Project 2017

Soldier Configurations

- **To achieve and facilitate modularity in a soldier system, two main configurations have been defined:**
  - Basic Configuration (essential Situational Awareness)
    - *Light Basic Configuration*
      - **Voice communication**
      - **Self Position report**
    - *Leader Basic Configuration* - additional devices
      - **Voice communication**
      - **Orientation & Navigation**
      - **Blue Force Tracking.**
  - *Extended Configuration,* is a composition of the basic configuration plus specific devices that enable more functionalities, depending on the role and the mission type. It is a bundle of configurations

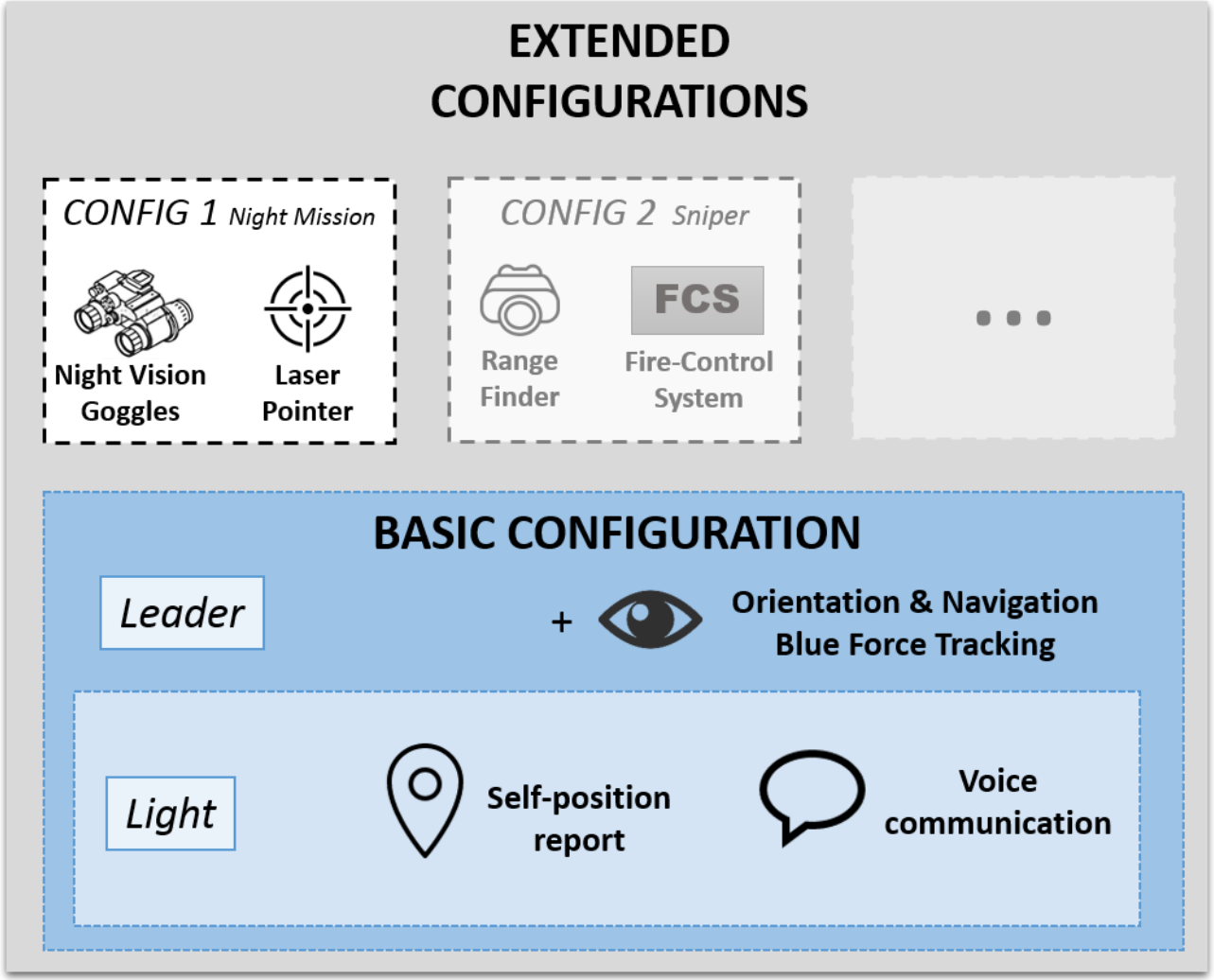

© STASS II Project 2017

Soldier Configurations – Basic Configuration

Basic Configuration provides a reduction of:

- **energy consumption**, power supply is still a very restrictive issue in the field
- **costs**, lowering the number of devices allows decreasing procurement expenditures
- **training requirements**, the basic configuration requires minimum training to be deployed.
- **logistic needs**

Light

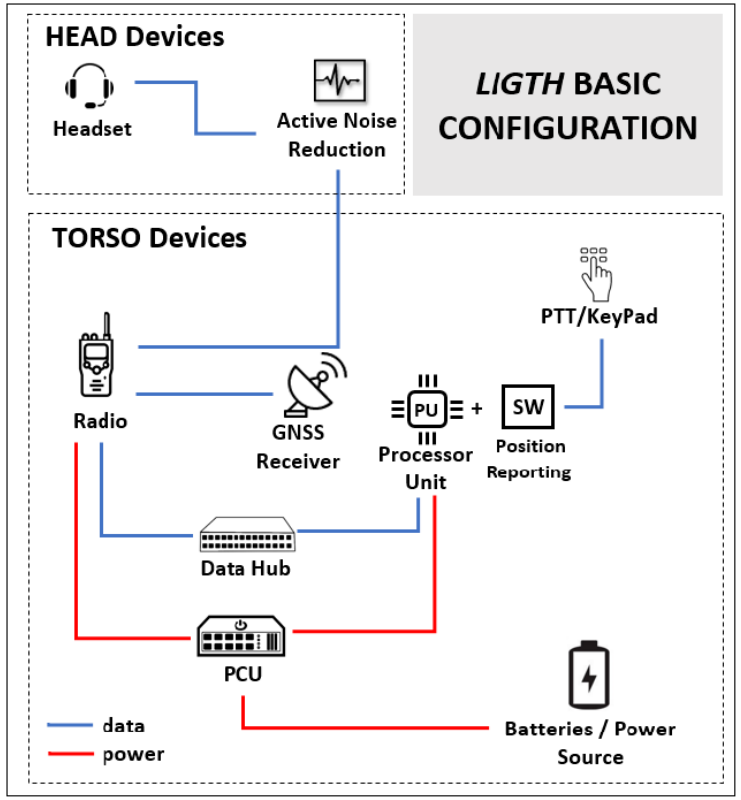

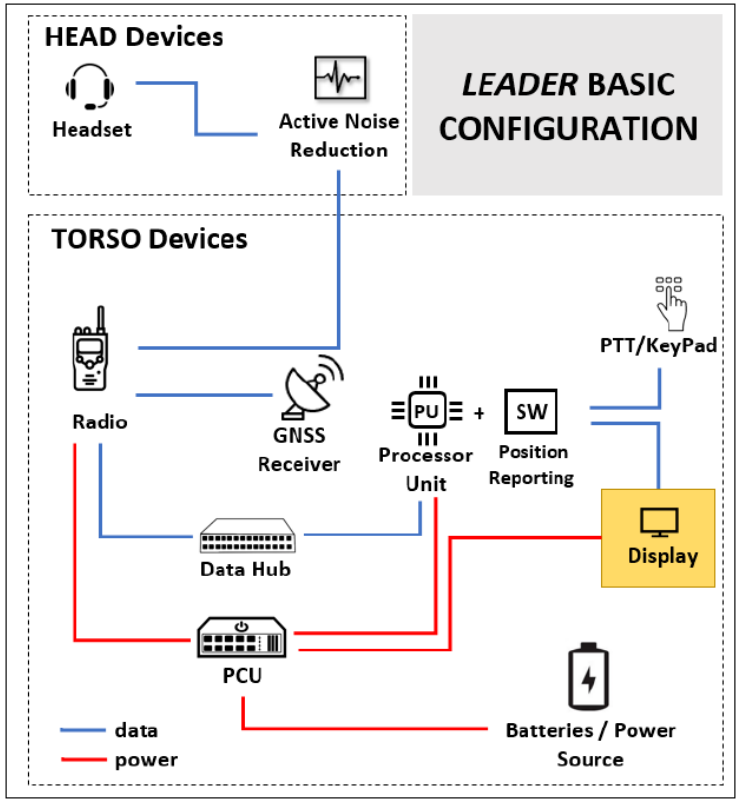

Leader

- Enhance S/A
- Exchange Tact. Info

© STASS II Project 2017

Soldier Configurations – Basic Configuration, “on-board” Devices (I)

System View – Basic configuration devices “on-board” System (I)

- **Radio:**
  - Core device of a DSS, that must include simultaneous voice and data communications, to guarantee intra-squad voice and positions exchange.
  - A state-of-the-art radio allows not only intra-squad communication but also inter-squad voice and data communication at platoon level.
  - Some personal radio systems with advanced capabilities allow the exchange of tactical data (self-position for Blue Force Tracking) without the need to use an additional processing unit hosted in a WPC or similar.

Interoperability

- Loaned Radio (STANAG 4677)
  - A Loaned Radio needs to be provided by the involved nations for interoperability.
  - This radio, should fulfil the requirements defined in the STANAG 4677 VOL 4
  - It is desirable that this radio allows not only intra-squad communication but also inter-squad voice and data communication at platoon level.
- Software Defined Radio (SDR)
  - \+ Operates over multiple frequencies and wave forms
  - \+ Ad-Hoc Networking (MANET) operation
  - \+ Voice & Data communication over a single channel
  - \- Interoperability with legacy radios
  - \- The lack of a common European waveform
  - \- Software reliability

© STASS II Project 2017

Soldier Configurations – Basic Configuration, “on-board” Devices (II)

- **GNSS receiver:**
  - to acquire the current geographical position of the system.
  - the position receiver is typically part of the radio system.
  - in the context of European Armed Forces, GNSS receiver should be a multi-constellation system supporting as a minimum EU Galileo and US GPS systems. It is recommended that GNSS receiver has protection against jamming and spoofing, making use of Galileo Public Regulated Service (PRS) signal.

- **Batteries/Power Source and Power Control Unit (PCU):**
  - guarantees proper performance of the system.
  - the operational requirements (mission profile) and the DSS power needs are the main aspects that can directly influence in the power design.
    - mission profile defined by the mission type and duration
    - devices consumption: Set of devices needed for the selected configuration
    - the PCU is a power distribution unit designed to work stand alone, it delivers clean filtered power to support a range of standard and special equipment used in the DSS architecture.

STASS I provides a complete description of the power system, batteries design, devices power consumption, power management and power distribution.

© STASS II Project 2017

Soldier Configurations – Basic Configuration, “on-board” Devices (III)

- **PTT/Keypad:** Physical interface to perform simple operations
- **Data Hub:**
  - suitable structure to organize the interconnections between the different devices.
  - this hub can be isolated or integrated in a process unit or in a WPC.
- **Processor Unit:**
  - The process unit provides the DSS with the necessary computing capabilities.
  - It can be a stand-alone device or integrated within a radio, a WPC or a Smartphone.
- **Headset (featuring ANR):**
  - A hands-free head-set is necessary to operate without drawing away the attention in the environment.
  - In order to maintain communication in battle conditions, it is necessary to have an ANR capabilities for noise cancellation.

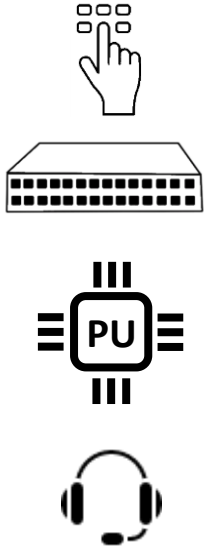

Leader

- **Display (Exclusive of Leader Basic Configuration):**
  - In a leader basic configuration it is recommended to have a display system that ensures the operational capabilities of this role
    - small screens,
    - larger screens
    - HMD.
    - Hand-held/Wrist mounted display

© STASS II Project 2017

Soldier Configurations – Systems Identification “on-board Devices”

- Group and selection of devices to fulfil Operational Req. and Capability Goals

SUPPORTING DEVICES
- Thermal Optical Devices - Monoculars/Binoculars - Target Acquisition - Laser Range-Finder - Thermal Imagers - Additional power supply (fuel cell, energy harvesting system...)
SHARED PHERIPHERALS
- UxV - External Link-up Modules - Long range manpack radios - UGS

	BASIC CONFIGURATION	EXTENDED CONFIGURATION
HEAD	- Headset - Active Noise Reduction	- Night Vision Goggle - Head Mounted Display
TORSO	- Radio - GNSS Receiver - Batteries / Power Supply - Processor Unit - PCU - Push To Talk / Keypad + DISPLAY (*Leader* Conf.)	- Navigation Aids - Smal size Display / Display >3.5" - Enemy Detection System - Biometric Sensors - Smartphone / WPC
WEAPON		- Night Vision - Corner Aiming - Red Dot Sight - Range-Finder - Holographic Weapon Sight - Laser Pointer - Fire Control System

Categories as in Def-Stan 23-12 “Generic Soldier Architecture” (GSA) for the data and power infrastructure definition.

© STASS II Project 2017

STASS II Industrial Workshop – WP4 System View

- Development Process
- Soldier Configurations
- **NSV-1 System Interface Description**
- NSV-2 Systems Communication Description
- NSV-3 Systems to Systems Matrix
- NSV-4 Systems Functionality Description
- NSV-12 Service Provision

© STASS II Project 2017

NSV-1 System Interface Description – On-board Nodes Architecture

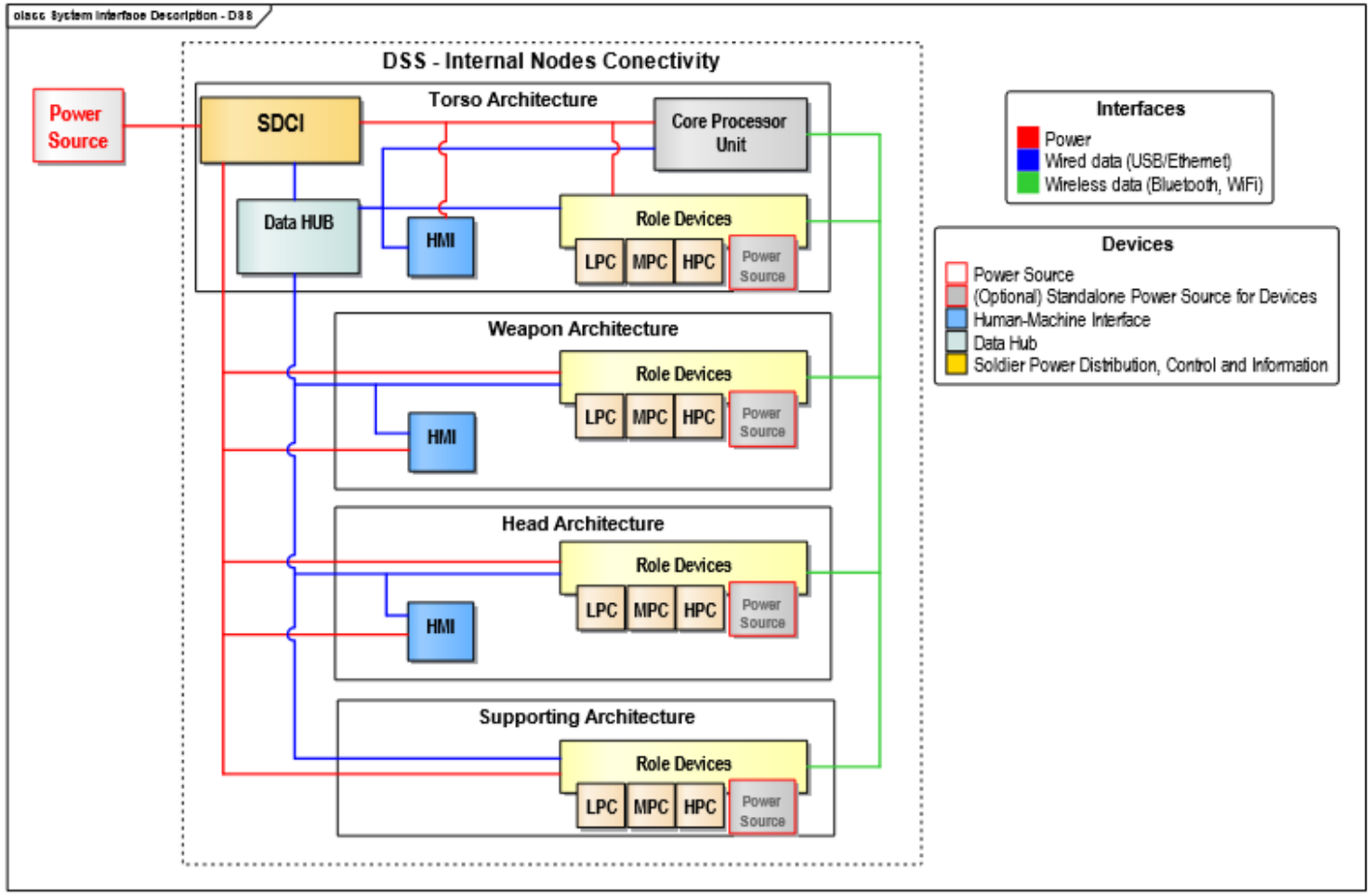

Using the results obtained in STASS I the sensors and devices are divided into groups considering their power consumption

- **SDCI:** (Soldier Power Distribution, Control and information), It consists of all distribution components like cabling, PCU. A common energy source. It provides data distribution too.
- **Role Devices:** the equipment will vary depending on the soldiers/squads role and mission.
  - **LPC** will have usually a dedicated battery and will not be connected to the SDCI
  - **HPC** usually have stand-alone energy supply,
  - **MPC** Devices are powered by a common energy source
- **Core Processor Unit** ensures the data processing and allows the system communication, storage and data distribution.
- **HMI** (Human Machine Interface) enables the soldier´s capacity to interact with the system.

© STASS II Project 2017

NSV-1 System Interface Description – On-board Nodes Interfaces And Connectors

- **Interfaces and connectors for Power Sources** (Clean & Dirty power Sources, Bulk charger, dedicated batteries, see STASS I)
- **Interfaces and connectors for data management and data control** (USB 2.0, Medium Power 100Mb/s Ethernet) for Low and Medium power consumers, following the recommendations of the previous study which focused on power.

WIRED		
USB 2.0	Data transfer rate	480 Mbps
	Voltage range	+5V
Ethernet Standard 100BASE-TX	Data transfer rate	100 Mbps
	Voltage range	~400 m
WIRELESS		
Wifi 802.11b	Data transfer rate	~11 Mbit/s
	Range	Long Range Link
Bluetooth	Data transfer rate	~32 Mbit/s
	Range	Medium Range Link

- **Cabling and Connectors**
  - After the data management and control needs are specified, it's necessary to suggest the related connector standards but there is still no standard military connector.
    - design a wiring structure suitable for the soldier's comfort and resistance needs in the field.
    - rigid and robust to resist high temperatures
    - protect from corrosion by solvents / fuels or abrasions
    - reduce the contact with tools and environmental degradation.

© STASS II Project 2017

NSV-1 System Interface Description – Off-board Systems Interfaces

- **Logistics and Maintenance Systems**
  - Power Source Mobile/Stationary
  - Material/Maintenance
  - Training
- **Platform Systems**
  - Ground, Air and Marine
- **ISTAR Systems**
  - Sensors
  - Unmanned Vehicles
- **Joint Forces Systems**
  - Joint Forces
  - Mission Information Network
  - Platoon Commander System
- **Coalition Forces Systems**
  - Coalition Forces

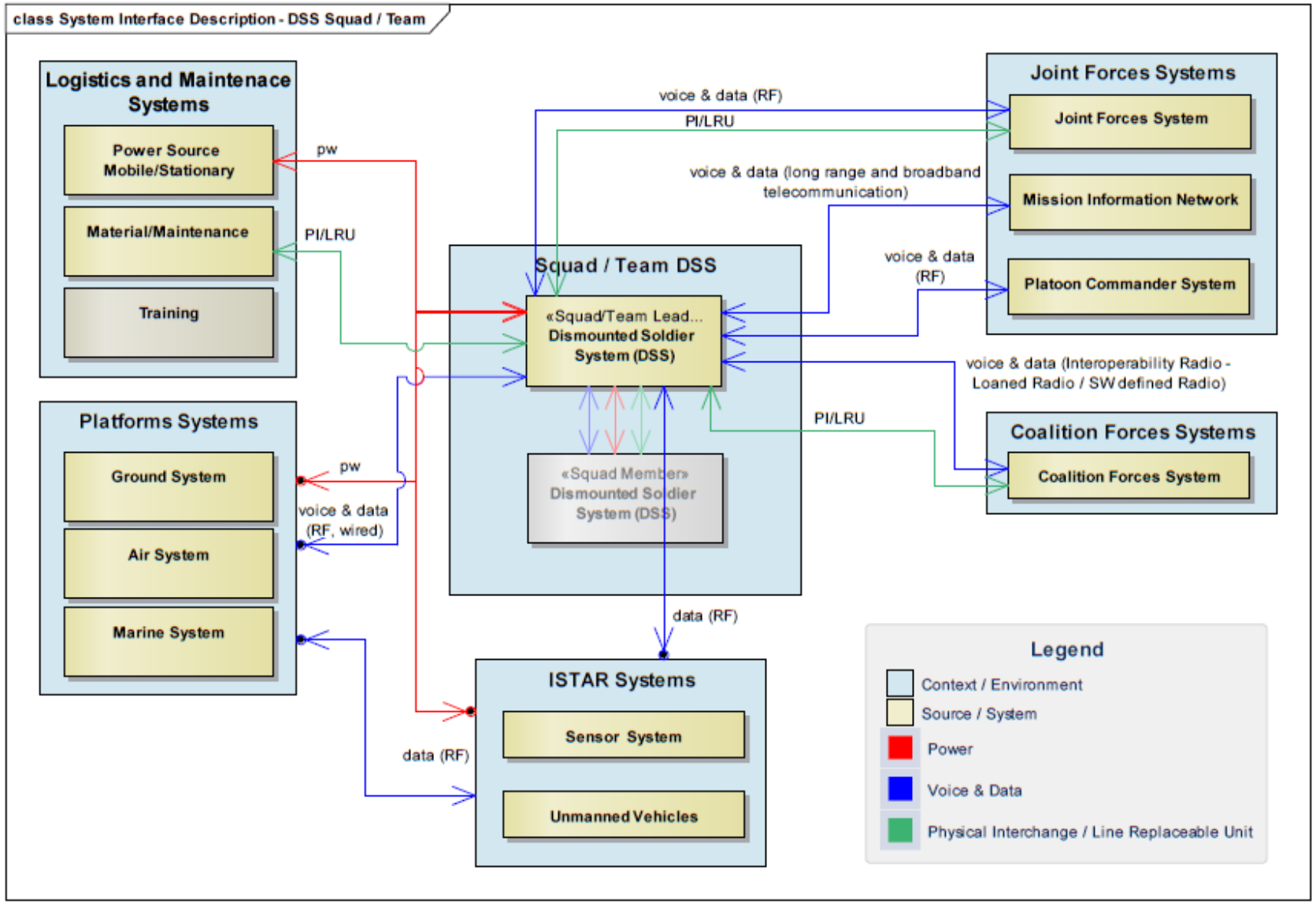

© STASS II Project 2017

STASS II Industrial Workshop – WP4 System View

- Development Process
- Soldier Configurations
- NSV-1 System Interface Description
- **NSV-2 Systems Communication Description**
- NSV-3 Systems to Systems Matrix
- NSV-4 Systems Functionality Description
- NSV-12 Service Provision

© STASS II Project 2017

NSV-2 Systems Communication Description – External Systems Information Exchange (I)

To analyse the data exchange it has been identified the most appropriate standards and communication protocols

Domain / System	Data Exchange	Standards / Protocols
Logistics		
• Power Source Mobile/Stationary	Only power exchange	See STASS I
• Material/Maintenance	This category includes the Logistics Support System, which provides material, maintenance and Line Replacement Units	(Not considered in STASS-II)
• Training	To be included in v3	
Platforms		
• Ground System • Air System • Marine System	• voice, • geographical positioning, • tactical information, • multimedia (image and video) and • power using the wired connection.	NGVA, STANAG 4754, Ethernet, USB 2.0 STANAG 4677, Ethernet, IP, UDP NFFI , STANAG 5527 (for central servers that collect position location updates from all vehicles) MAJIIC2, STANAG 4545 (NSIF), STANAG 4609 (Video)

© STASS II Project 2017

NSV-2 Systems Communication Description – External Systems Information Exchange (II)

Domain / System	Data Exchange	Standards / Protocols
ISTAR Systems		
• Sensor System	• data, • tactical information, • multimedia (image and video), • power using a wired connection	STANAG 4609: NATO Digital Motion Imagery Standard STANAG 4545: NATO Secondary Imagery Format (NSIF)
• Unmanned Vehicles	• radar information, • multimedia (image and video), • power using a wired connection	STANAG 4609: NATO Digital Motion Imagery Standard STANAG 4545: NATO Secondary Imagery Format (NSIF)
Coalition Systems		
• Coalition Forces	• geographical positions, • tactical information, • power and material, sharing the rechargeable batteries and material for maintenance (LRU).	STANAG 4677, Ethernet, IP, UDP STANAG 4406: Military Messaging

© STASS II Project 2017

NSV-2 Systems Communication Description – External Systems Information Exchange (III)

Domain / System	Data Exchange	Standards / Protocols
Joint Forces System		
• Joint forces system	• voice, • geographical positions, • tactical information, • multimedia (image and video), • power and material, sharing the rechargeable batteries and material for maintenance (LRU).	To be included in v3
• Mission Information Network System	To be included in v3	To be included in v3
• Platoon Commander System	• geographical positions, • tactical information, • Power and material, sharing the rechargeable batteries and material for maintenance (LRU).	To be included in v3

© STASS II Project 2017

NSV-2 Systems Communication Description – Internal Systems Information Exchange

Device	Type of Communication	Data Type	Standard/ Protocols
• Dual Radio	• RF	Voice & Data	To be included in v3
• Headset • ANR	• To be included in v3	Data	To be included in v3
• Batteries	• Ethernet • USB	Power	• USB 2.0 • Ethernet Standard 100BASE-TX
• PCU	• Ethernet • USB	Power & Control Data	• USB 2.0 • Ethernet Standard 100BASE-TX
• Process Unit	• Ethernet • USB • wireless connection	Data	• USB 2.0 • Ethernet Standard 100BASE-TX • Wifi 802.11b • Bluetooth
• Data Hub	• Ethernet • USB	Data	• USB 2.0 • Ethernet Standard 100BASE-TX

© STASS II Project 2017

STASS II Industrial Workshop – WP4 System View

- Development Process
- Soldier Configurations
- NSV-1 System Interface Description
- NSV-2 Systems Communication Description
- **NSV-3 Systems to Systems Matrix**
- **NSV-4 Systems Functionality Description**
- NSV-12 Service Provision

© STASS II Project 2017

NSV-3 Systems to Systems Matrix – Communication between external Systems

This is a summary description of the system to system interfaces identified in NSV-1,the information exchange matrix shows systems listed in the rows and columns of the matrix. The marked cells identify a system interface pair.

	Dismounted Soldier System	Power Source Mobile/Stationary	Material/Maintenance	Training	Ground/Air/Marine System	Sensor system	Unmanned Vehicles	Coalition Forces	Joint Forces	Mission Information Network	Platoon Commander System
DSS (Squad/Team Leader)	■										
Power Source Mobile/Stationary		■									
Material/Maintenance			■								
Training				■							
Ground/Air/Marine System (Platform)					■						
Sensor System						■					
Unmanned Vehicles							■				
Coalition Forces System								■			
Joint Forces System									■		
Mission Information Network										■	
Platoon Commander System											■

© STASS II Project 2017

NSV-4 Systems Functionality Description

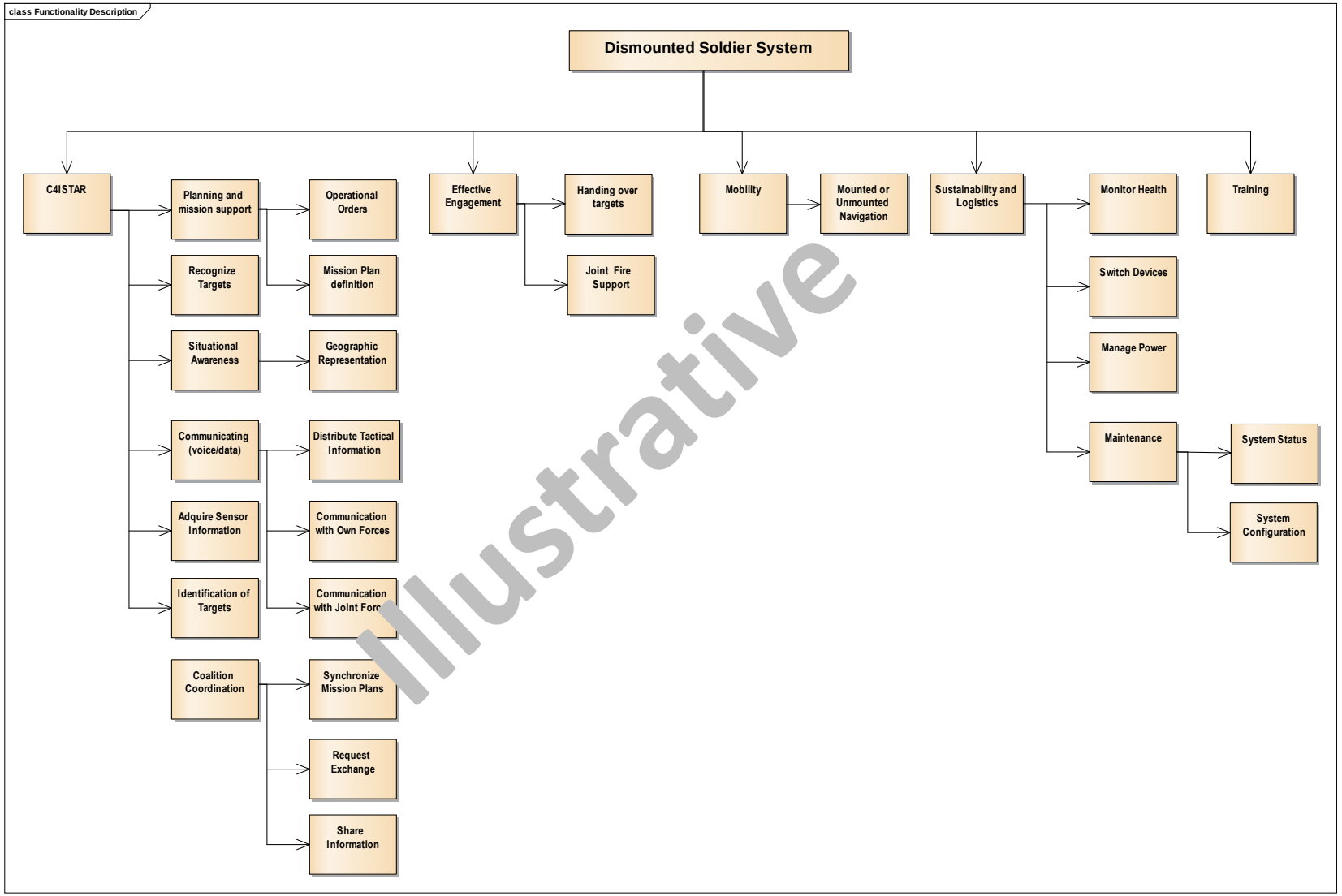

- According to the capabilities described in chapter 4.1 (NCV-1 Capability Vision), the system presents a set of functions to guarantee the capabilities of the dismounted soldier.

- Composed of:
  - Taxonomy of System Functions
  - Mapping of “on-board” Systems to System Functions
  - C4ISTAR – DSS Data Flow Model

© STASS II Project 2017

STASS II Industrial Workshop – WP4 System View

- Development Process
- Soldier Configurations
- NSV-1 System Interface Description
- NSV-2 Systems Communication Description
- NSV-3 Systems to Systems Matrix
- NSV-4 Systems Functionality Description
- **NSV-12 Service Provision**

© STASS II Project 2017

NSV-12 Service Provision

- This subview is a mapping of systems, identified in NSV-1, to the services defined in NSOV-1
- It specifies how to develop a target architecture considering services that needs to implement, by mapping each service to the systems that provide it
- Considered trace matrices:
  - Trace from “off-board” Systems to Squad/Team Operational Services
  - Trace from “off-board” Systems to Soldier Operational Services
  - Trace from “on-board” Devices to DSS Functional Services

	Reconnaissance	Emergency Evacuation	Infiltration Tactics	Manoeuvre Mov. Tactics	Patrolling	Raiding	Rapid Deployment	Night Combat
Platforms System	●	●			●			
Sensor System	●		●					
Unmanned Vehicles	●				●			
Coalition Forces System		●						
Joint Forces System		●						
Mission Information Networ	●	●	●			●		
Platoon Commander System	●	●						
Logistics and Maintenance System							●	

Illustrative

© STASS II Project 2017

THANK YOU

© STASS II Project 2017